69348 Series RJ45 10/100/1000 BASE-TX w/ LED

General specifications	
Insulator material	High temperature plastic, UL94V-0
Contact material	Copper alloy
Contact plating	Gold over nickel
Shield material	Brass, plating: nickel
Insulator resistance	1000 MΩ min.
Dielectrical withstanding	1500 VAC for 1 min
Durability	750 cycles
Operation temperature	-40 °C to +85 °C
Complies with	IEEE 802.3
Soldering	Lead free wave soldering process
Mating parts series	

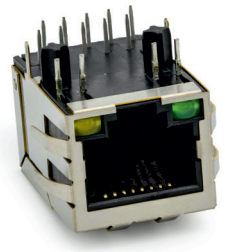

RoHS compliant

Mechanical dimensions

Unit: mm

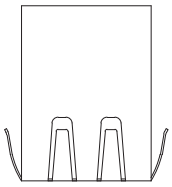

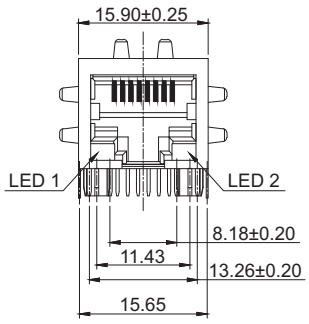

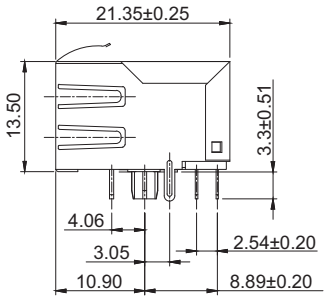

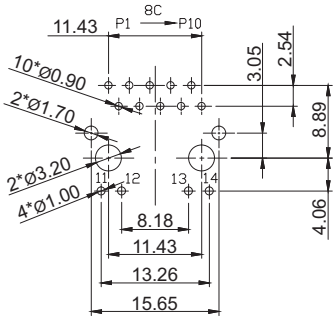

Recommended P.C.B. layout
component side

LED 1	LED 2
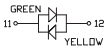	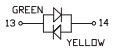

Tolerances		
Linear	.X	± 0.20
	.XX	± 0.15
	.XXX	± 0.10

continued on page 2

Part numbering guide

69348	C	20	G	Y	0
Series	Contact plating	Schematics	Color LED1	Color LED2	Ground spring
	C = 3 µ" gold	see page 2	N = w/o LED		0 = w/o spring
	D = 6 µ" gold		D = Green/yellow		1 = Top spring
	F = 15 µ" gold		G = Green		2 = Side spring
	J = 30 µ" gold		Y = Yellow		3 = Top and side spring
	K = 50 µ" gold				

* standard

info@nexus-de.com
www.nexus-de.com
phone +49 (0)531 / 23 142-0
fax +49 (0)531 / 23 142-55

NEXUS COMPONENTS
competence in electronics

Mechanical dimensions

Unit: mm

Schematics

Note: other schematics and LED polarity on customer request

1217

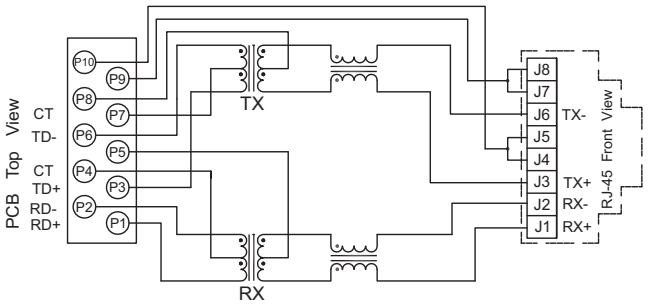

Turns ratio	Inductance	Insertion loss	Return loss			Cross talk	Common mode
		1 - 100 MHz	1 - 30 MHz	30 - 60 MHz	60 - 80 MHz	1 - 100 MHz	1 - 100 MHz
1:1	350 µH min. @ 0.1 V, 100 KHz, 8 mA DC Bias	-1.2 dB max.	-16 dB min.	-12 dB min.	-10 dB min.	-30 dB min.	-30 dB min.

20

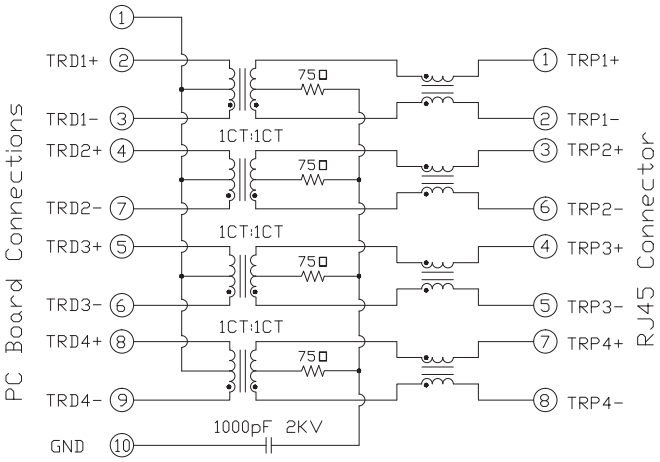

Turns ratio	Inductance	Insertion loss	Return loss			Cross talk	Common mode
		1 - 100 MHz	1 - 30 MHz	30 - 60 MHz	60 - 80 MHz	1 - 100 MHz	1 - 100 MHz
1:1	350 µH min. @ 0.1 V, 100 KHz, 8 mA DC Bias	-1.1 dB max.	-18 dB min.	-16 dB min.	-12 dB min.	-30 dB min.	-30 dB min.

Tolerances		
Linear	.X	± 0.20
	.XX	± 0.15
	.XXX	± 0.10

info@nexus-de.com
www.nexus-de.com
phone +49 (0)531 / 23 142-0
fax +49 (0)531 / 23 142-55
NEXUS COMPONENTS
competence in electronics